Supplementary Material

Discussion on assignment of ReP1 to FABPs or CRABPs

The assignment of ReP1-NCXSQ to the CRABP subfamily of fatty acid binding proteins is not an easy task. There are many factors that makes it difficult to assign it to either FABPs or CRABPs from the sequence to the structure and function, and all of them are controversial when considering invertebrate members of this family of protein; CRABPs have a close are phylogenetical relationship with vertebrate heart-type FABPs; there are few reported invertebrate CRABPs, FABPS and CRABPs bind with high affinity fatty acids and retinoic acid. Finally, it should be mentioned that invertebrate FABPs are very heterogenous an almost all of them seems to belong to the subfamily of H.FABPs. ReP1-NCXSQ has the characteristic binding triad residues involved in the interaction with ligand carboxylate head groups, is a feature pertaining to several FABPs and to CRABPs; 3D superimposable structure and is phylogenetically closer to CRABPs than FABPs. By the other side since sequence and structure data slightly tilted the balance in favour of CRABPs, available functional experiments do not completely support this asignation. According the current report where ReP1-NCXSQ binds to palmitic acid indicating that this ligand could be the physiological one. However, we can not exclude that in vitro experiment does not fully reflects the conditions in vivo. Taking together all the data we can assume that ReP1-NCXSQ is at the frontier between both subfamilies, with several elements that lead us to place it among the CRABPs.

Fig. S1 Alignment of invertebrates CRABPs and ReP1-NCXSQ. The following sequences have been aligned, respectively: CRABP from *Agrius convolvuli* (BAF02663.1); CRABP from *Manduca sexta* (AAC24317.1); CRABP from *Bombix mori* (NP_001037364.1); CRABP from *Plutella xylostella* (BAD26694.1); CRABP/RBP from *Metapenaeus ensis* (AAL68638)

```
Rep1-NCXSQ              MAADLAG-KWILESSENFDDYMKAVGVGMVMRKMANAATPTQEIKIDGDSWSIKTSTTFK
CRABP_A.convolvuli      --MEFVGKKYKMISSENFDEFMKAIGVGLITRKAANAVTPTVELRQEGDGYNLVTSSTFK
CRABP_M.sexta           --MEFVGKKYKMISSENFDEFMKAIGVGLITRKAANAVTPTVELRQEGDGYNLVTSSTFK
CRABP_B.mori            --MEFVGKKYKMTSSENFDEFMKTIGVGLITRKAANAVTPTVELRKDGDEYNLVTSSTFK
CRABP_P.xylostella      --MEFVGKKYKMTSSENFDDFMKAIGVGLITRKAANAVTPTVELKKDGDNFVLVTSSTFK
CRABP_M.ensis           -MAKFEG-KFRMESSENFDEFMKALGVGLVMRKMGNAATPTVEITKDGDTYSLKTVTTFK
                           .: * *: : ******::**::***:: ** .**.*** *:  :** : : * :***

Rep1-NCXSQ              TTDISFTIGQEFDETTGDGRKIKTTCKIDGNAMIQDQKGSP-----DSILSREVKDGKMH
CRABP_A.convolvuli      TTEMKFKPGEEFDEERADGAKVKSVCTFDGNVLKQVQKAADGL---EVTYVREFGPEEMK
CRABP_M.sexta           TTEMKFKPGEEFDEERADGAKVKSVCTFEGNTLKQVQKAADGL---EVTYIREFGPEEMK
CRABP_B.mori            TTEMKFKPGEEFEEDRADGAKVKSVCTFEGNTLKQVQKAPDGL---EVTYVREFGPEEMK
CRABP_P.xylostella      TTEMKFSPGQEFDEERADGAKVKSVCTFEGNTLKQVQKAQDGS---EVTYVREFGPEEMK
CRABP_M.ensis           TTEIKFKLGEEFEETTADGRVVKSTVTMDGNKLVHKQTGDKEKKEKDSILTREFSDDQML
                        **::.*. *:**:*  .**  :*:. .::** : : *..       :    **.   :*

Rep1-NCXSQ              MILKVNDVVCTRIYKRVD
CRABP_A.convolvuli      AVMTAKDVTCTRVYKVQ-
CRABP_M.sexta           AVMTAKDVTCTRVYKVQ-
CRABP_B.mori            AVMTAKDVTCTRVYKVQ-
CRABP_P.xylostella      AVMTTKDVTCTRVYKAQ-
CRABP_M.ensis           MECKVDDIVCTRVYKRVV
                           ...*:.***:**
```

Fig. S2 Alignment of vertebrates CRABPs and ReP1-NCXSQ. The following sequences have been aligned, respectively: CRABP2 from *Bos taurus* (NP_001008670.1); CRABP2 from *Sus scrofa* (NP_001157981.1); CRABP2 Homo sapiens (NP_001869.1); CRABP2 from *Mus musculus* (NP_031785.1); CRABP2 from *Rattus novergicus* (NP_058940.1); CRABP1 from *Bos taurus* (NP_851371.1); CRABP1 from *Homo sapiens* (NP_004369.1); CRABP2a from *Danio rerio* (NP_878279.1); CRABP2b from *Danio rerio* (NP_001001842.1)

```
ReP1-NCXSQ              -------MAADLAGKWILESSENFDDYMKAVGVGMVMRKMANAAT--PTQEIKIDGD-SW
CRABP2_B.taurus         --------MPNFSGNWKIIRSENFEDLLKVLGVNVMLRKIAVAAASKPAVEIKQEGD-TF
CRABP2_S.scrofa         --------MPNFSGNWKIIRSENFEDLLKVLGVNVMLRKIAVAAASKPAVEIKQDGD-TF
CRABP2_H.sapiens        --------MPNFSGNWKIIRSENFEELLKVLGVNVMLRKIAVAAASKPAVEIKQEGD-TF
CRABP2_M.musculus       --------MPNFSGNWKIIRSENFEEMLKALGVNMMMRKIAVAAASKPAVEIKQEND-TF
CRABP2_R.norvegicus     --------MPNFSGNWKIIRSENFEEMLKALGVNMMMRKIAVAAASKPAVEIKQENDDTF
CRABP1_B.taurus         --------MPNFAGTWKMRSSENFDELLKALGVNAMLRKVAVAAASKPHVEIRQDGD-QF
CRABP1_M.musculus       --------MPNFAGTWKMRSSENFDELLKALGVNAMLRKVAVAAASKPHVEIRQDGD-QF
CRABP1_H.sapiens        --------MPNFAGTWKMRSSENFDELLKALGVNAMLRKVAVAAASKPHVEIRQDGD-QF
CRABP1b_D.rerio         --------MPNFAGTWKMKSSENFEELLKALGVNAMLRKVACAAASKPHVEIRQNGE-QF
CRABP2a_D.rerio         ----MDRKIPDFAGTWKMKSSENFEELLKALGVNVMLRKIAVAAASKPSVEITQEGE-TL
CRABP2b_D.rerio         MESNTEKTFADFSGSWKMKSSENFEELLKALGVNVFLRKIAVAAASKPAVEISQQGE-SL
                                 .:::*.* :  ****:: :*.:**. .:**:* **:  *  **  :.:

ReP1-NCXSQ              SIKTSTTFKTTDISFTIGQEFDETTGDGRKIKTTCKIDG-NAMIQDQ---KGS-PDSILS
CRABP2_B.taurus         YIKTSTTVRTTEINFKIGEEFEEQTVDGRPCKSLVKWESENKMVCEQRLLKGEGPKTSWT
CRABP2_S.scrofa         YIKTSTTVRTTEINFKIGEEFEEQTVDGRPCKSLVKWESEDKMVCEQRLLKGEGPKTSWT
CRABP2_H.sapiens        YIKTSTTVRTTEINFKVGEEFEEQTVDGRPCKSLVKWESENKMVCEQKLLKGEGPKTSWT
CRABP2_M.musculus       YIKTSTTVRTTEINFKIGEEFEEQTVDGRPCKSLVKWESGNKMVCEQRLLKGEGPKTSWS
CRABP2_R.norvegicus     YIKTSTTVRTTEINFKIGEEFEEQTVDGRPCKSLVKWESENKMVCEQRLLKGEGPKTSWS
CRABP1_B.taurus         YIKTSTTVRTTEINFKVGEGFEEETVDGRKCRSLPTWENENKIHCTQTLLEGDGPKTYWT
CRABP1_M.musculus       YIKTSTTVRTTEINFKVGEGFEEETVDGRKCRSLPTWENENKIHCTQTLLEGDGPKTYWT
CRABP1_H.sapiens        YIKTSTTVRTTEINFKVGEGFEEETVDGRKCRSLATWENENKIHCTQTLLEGDGPKTYWT
CRABP1b_D.rerio         YIKTSTTVRTTEINFQIGQEFYEETVDGRKCKSLATWETENKMTCRQTLLDGNGPKTYWT
CRABP2a_D.rerio         TIKTSTSVRTTNVTFTVGQEFNEATVDGRPCTSFPRWVTDSKISCEQTLQKGEGPKTSWT
CRABP2b_D.rerio         SVQTSTSVRTTHVSFTVGESFNETTVDGRPCTSFPKWETDCKISCEQTLQKGEGPETSWT
                         ::***:.:**.:.* :*: * * * ***   :         :   *   .*. *.:  :

ReP1-NCXSQ              REVKD-GKMHMILKVNDVVCTRIYKRVD
CRABP2_B.taurus         RELTNDGELILTMTADDIVCTRVYVRE-
CRABP2_S.scrofa         RELTNDGELILTMTADDIVCTRVYVRE-
CRABP2_H.sapiens        RELTNDGELILTMTADDVVCTRVYVRE-
CRABP2_M.musculus       RELTNDGELILTMTADDVVCTRVYVRE-
CRABP2_R.norvegicus     RELTNDGELILTMTADDVVCTRVYVRE-
CRABP1_B.taurus         RELANDDELILTFGADDVVCTRIYVRE-
CRABP1_M.musculus       RELAN-DELILTFGADDVVCTRIYVRE-
CRABP1_H.sapiens        RELAN-DELILTFGADDVVCTRIYVRE-
CRABP1b_D.rerio         RELRG-NELILMFGADDVVCTRIYVRE-
CRABP2a_D.rerio         REITNDAELILTMTADDVVCTRVYVRE-
CRABP2b_D.rerio         RELTNDGQMILTMRAGDVVCTRVYERD-
                        **: .  :: : : ..*:****:* *
```

Fig. S3. Specific aminoacids of H-FABPs and CRABPs. The alignemnt shows a representative sequence of H-FABPs and of CRABPs. In red: conserved aminoacids between H-FABPs and ReP1-

NCXSQ; in black conserved aminoacids between CRABPs and ReP1-NCXSQ. Specific aminoacid of each group were deduced after the alignemnt of vertebrate H-FABPs and CRABPs sequences.

```
Rep1-NCXSQ              ---MAADLAGKWILESSENFDDYMKAVGVGMVMRKMANAA--TPTQEIKIDGDSWSIKTS

H-FABP[Bos_taurus]      ---MVDAFVGTWKLVDSKNFDDYMKSLGVGFATR--QVGNMTKPTTIIEVNGDTVIIKTQ
CRABP2[Bos_taurus]      ----MPNFSGNWKIIRSENFEDLLKVLGVNVMLRKIAVAAASKPAVEIKQEGDTFYIKTS

Rep1-NCXSQ              TTFKTTDISFTIGQEFDETTGDGRKIKTTCKIDG-NAMIQDQ---KGS-PDSILSREVK-
H-FABP[Bos_taurus]      STFKNTEISFKLGVEFDETTADDRKVKSIVTLDG-GKLVHVQ---KWNGQETSLVREMV-
CRABP2[Bos_taurus]      TTVRTTEINFKIGEEFEEQTVDGRPCKSLVKWESENKMVCEQRLLKGEGPKTSWTRELTN

Rep1-NCXSQ              DGKMHMILKVNDVVCTRIYKRVD
H-FABP[Bos_taurus]      DGKLILTLTHGTAVCTRTYEKQA
CRABP2[Bos_taurus]      DGELILTMTADDIVCTRVYVRE-
```

Fig. S4 Alignment of ReP1 with FABPs from insects. Lepd-13 from *Lepidogstrus destructor*; BtFABP from *Blomia tropicalis*; AgFABP from *Anopheles gambiae*; DroFABP from *Drosophila melanogaster*; LmMFABP from *Locusta migratoria*; SgMFABP from *Schistocerca gregaria*; AmFABP from *Apis mellifera*; MFB1 and MFB2 from *M. sexta*; HzFABP from *Helilcoverpa zea.*

```
ReP1-NCXSQ      MAADLAG-KWILESSE-NFDDYMKAVGVGMVMRKMANAATPTQEI-KIDGDSWSIKTSTT
Lepd_13         -MANIAG-QYKLDKSE-NFDQFLDKLGVGFLVKTAAKTVKPTLEV-AVDGDTYIFRSLST
BtFABP          -MP-IEG-KYKLEKSD-NFDKFLDELGVGFMVKTAAKTLKPTLEV-DVQGDTYVFRSLST
AgFABP          -MAVWEGKKYKMEKSE-GFDDYMLALGVGMVLRKLGNSISPTVEL-VKNGDEYTFNTLSP
DroFABP         --MSFVGKKYKLDKSE-NFDEYMKELGVGLVTRKMGNSLSPTVEV-TLEGDTYTLTTTST
LmMFABP         MVKEFAGIKYKLDSQT-NFEEYMKAIGVGAIERKAGLALSPVIELEVLDGDKFKLTSKTA
SgMFABP         MVKEFAGIKYKLDSQT-NFEEYMKAIGVGAIERKAGLALSPVIELEILDGDKFKLTSKTA
AmFABP          -MVQFEG-KFQFVSQN-NFEEFAKVLGDQNLVNTVLQPR-PSFEL-SKNGDEWTFTSSSG
MFB1            --MAYLGKVYKFDREE-NFDGFLKSIGLSEEQVQKYLQYKPSSQL-VKEGDKYKYISVSS
MFB2            --MSYLGKVYSLVKQE-NFDGFLKSAGLSDDKIQALVSDKPTQKM-EANGDSYSITSTGI
HzFABP          --MAFFGKESKFEKQEETFEDFVNALGLTPEQTQGYLTYTPTLKF-TQDGDSYTVTTITP
                      *    :  .   *: :    *             *  :.   :** :   :

Rep1-NCXSQ      FKTTDISFTIGQEFDE--TTGDGRKIKTTCKIDG-NAMIQDQKGSPDSILSR--EVKDGK
Lepd_13         FKNTEIKFKLGEEFEE--DRADGKRVKTVIVKDGDNKFVQTQYGDKEVKVVR--EFKGDE
BtFABP          FKNTEIKFKLGEEFEE--DRADGKRVKTVVNKEGDNKFIQTQYGDKEVKIVR--DFQGDD
AgFABP          SRTRRSSSSWAMEFDE--ETVDGRMVKSVCTFDG-NKLIHEQKGE--TTIVR--EFTATD
DroFABP         FKTSAISFKLGVEFDE--ETLDGRNVKSIITLDG-NKLTQEQKGDKPTTIVR--EFTDNE
LmMFABP         IKNTEFTFKLGEEFDE--DTLDGRKVKSIITQDGPNKLVHEQKGDHPTIIIR--EFSKEQ
SgMFABP         IKNTEFTFKLGEEFDE--ETLDGRKVKSTITQDGPNKLVHEQKGDHPTIIIR--EFSKEQ
AmFABP          DNTYTKTFKMNVPFEETLPSLPDRKFQTVTSIEG-NTFKTETQVNDSLKVTRLYEFSDNE
MFB1            DGTKETVFESGVETDDV--VQGGLPIKTTYTVDG-NTVTQVVNSAQG-SATFKREYNGDE
MFB2            GGERTVSFKSGVEFDDV--IGAGESVKSMYTVDG-NVVTHVVKGDAG-VATFKKEYNGDD
HzFABP          KTKSEVTFKSGVEFDD---NNANRHCKTTYTVAG-DTITQVQKYDDGNSLTITRKFSGNE
```

```
                                 ::      .   ::     * : .                .    .

Rep1-NCXSQ       MHMILKVN--DVVCTRIYKRVD
Lepd_13          VEVTASVD--GVTSVRPYKRA-
BtFABP           VVVTASVG--DVTSVRTYKRI-
AgFABP           LTATMTAG--NAKCVRYYKAV-
DroFABP          LITTLTIG--NVKCVRVYKAV-
LmMFABP          CVITIKLG--DLVATRIYKAQ-
SgMFABP          CVITIKLG--DLVATRIYKAQ-
AmFABP           LLVHISTNKSDVKATRVYKRV-
MFB1             LKVTITSSEWDGVAYRYYKA--
MFB2             LVVTITSSNWDGVARRYYKA--
HzFABP           MVVTLATSKWDGVARRYYKA--
                        .  .  . * **
```

Fig. S5. Phylogenetic tree derived from neighbour joining analysis *Brugia malayi* and *Manduca sexta* CRABPs and FABPs: Bm: *Brugia malayi*; Ms: *Manduca sexta;* ReP1-NCXSQ: squid isolated protein.

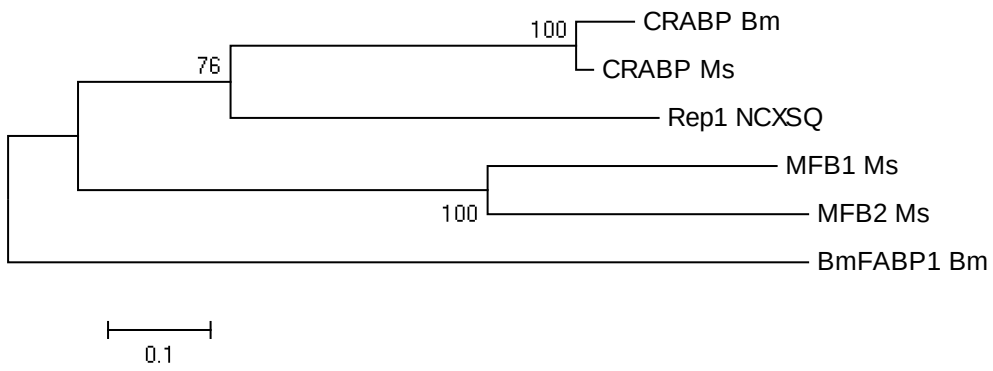

Fig. S6. Phylogenetic reconstrucions CRABPs and FABPs from FABPs and CRABPs from following arthropoda species: *Danaus plexippus* (Dp), *Manduca sexta* (Ms), *Bombyx mori* (Bm), *Plutella xylostella* (Px) *Metapenaeus ensis* (Me), *Locusta migratoria* (Lm), *Schistocerca gregaria* (Sg), *Lepidogastrus destructor* (Ld), *Blomia tropicalis* (Bt), *Apis mellifera* (Am), *Helilcoverpa zea* (Hz)

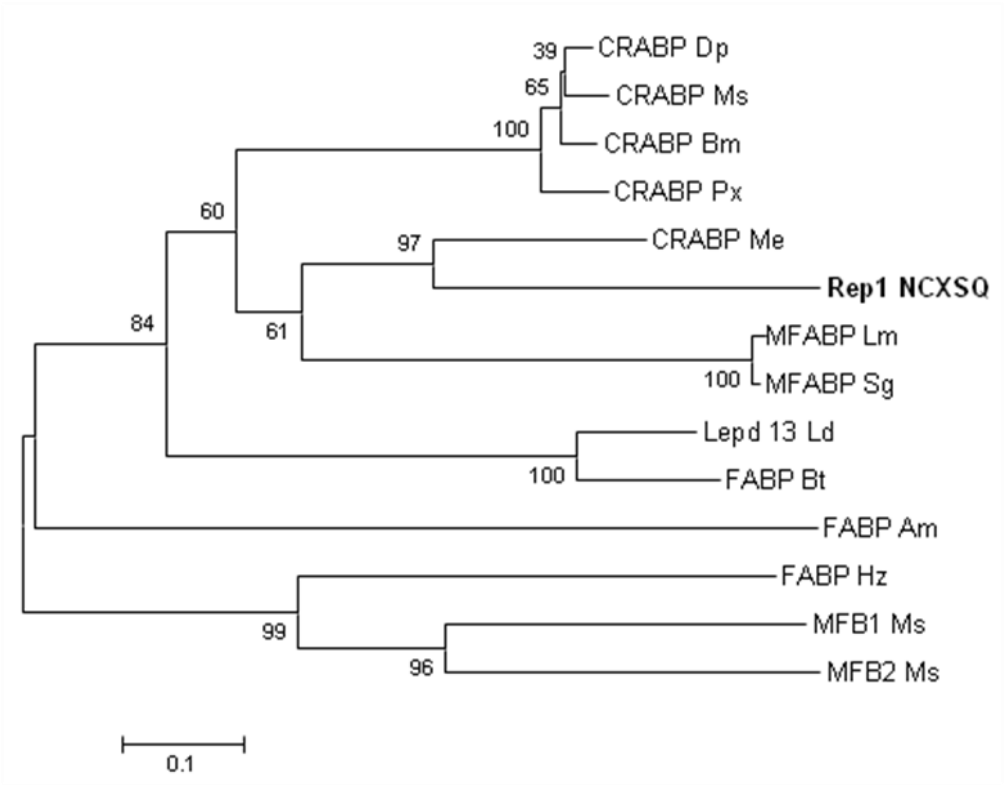

Fig. S7 Superposition of two randomly selected structures from CRABP and FABP members along with Rep1-NCXSQ. In yellow: Rep1-NCXSQ (3PPT), in white: human FABP4 (3RZY) and in red: CRABP II (2FS6).

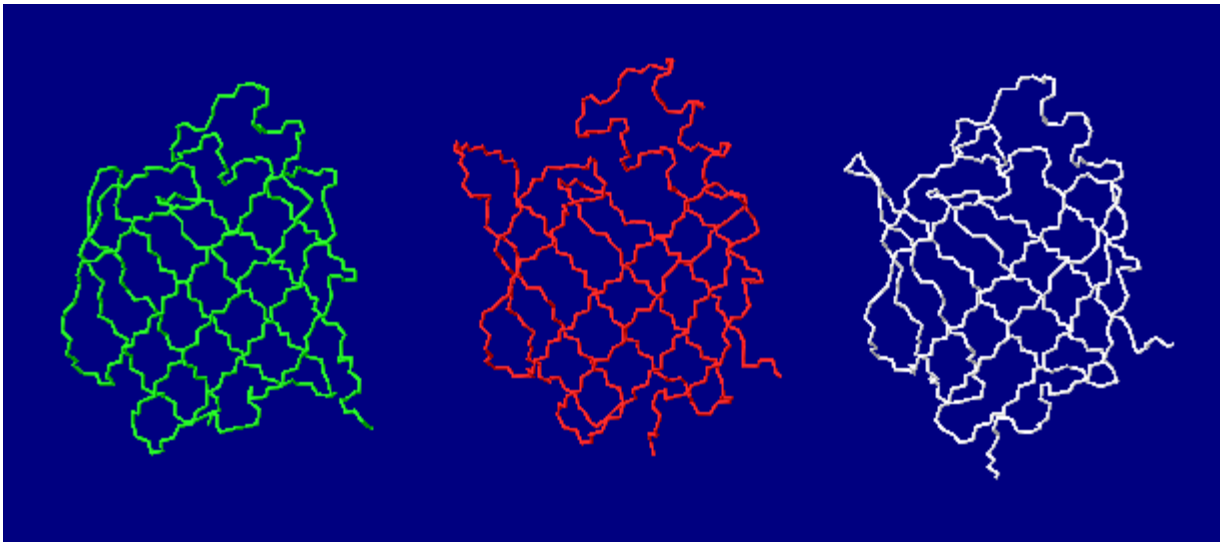

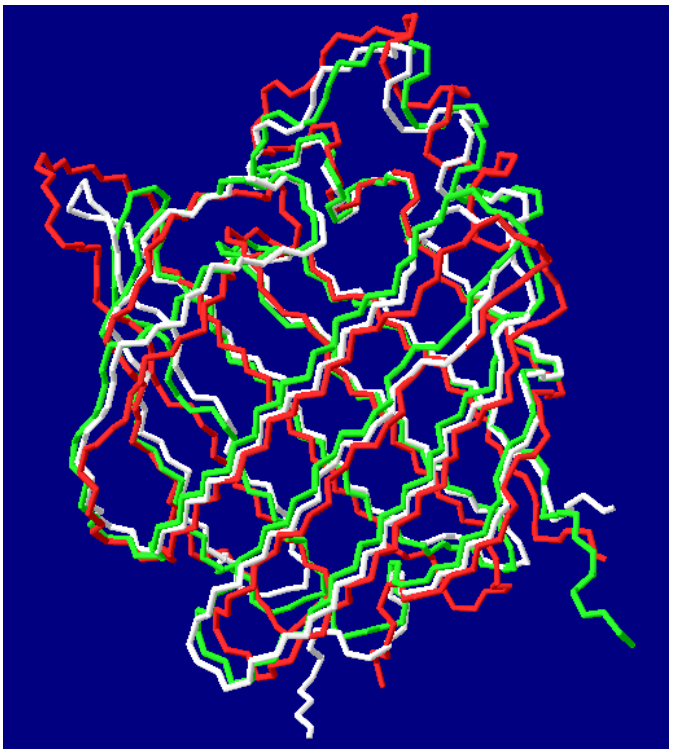

Fig. S8. Identification of fatty acids bound to ReP1-NCXSQ Tyr128Phe mutant by high resolution LC-MS analysis (LC-HRMS). LC chromatograms of fatty acids bound to Tyr128Phe mutated ReP1-NCXSQ after incubation with nerve vesicles **(A)** without or **(B)** with ATP; **(C)** Table summarizing identified fatty acids from HRMS measurements. * correspond to theoretical molecular masses indicated as $[M-H]^-$ ions ; *n.i.*: not identified. *i)* represent Total Ion Chromatograms and (ii-iv) correspond to Extracted Ion Chromatograms of palmitoleic (ii), palmitic (iii) and oleic (iv) acids, respectively.

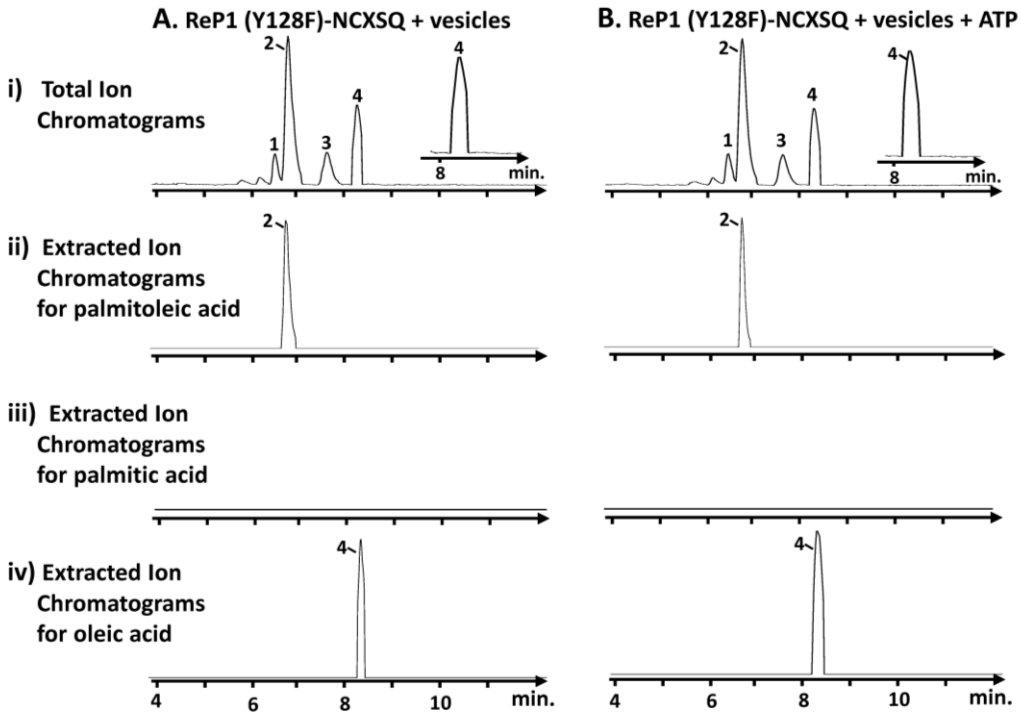

C.

Peak N°	Fatty acid	Molecular Formulae	Theoretical Monoisotopic Mass* (Da)	Measured Monoisotopic Mass (Da)
1	Docosahexaenoic acid (DHA)	$C_{22}H_{32}O_2$	327,232	327,233±0,001
2	Palmitoleic acid	$C_{16}H_{30}O_2$	253,216	253,215±0,001
3	Dihomo-γ-linolenic acid (DGLA) or Eicosatetraenoic acid (ETA) + *n.i.*	$C_{20}H_{34}O_2$?	305,248	305,247±0,001 267.230±0,001
4	Oleic acid	$C_{18}H_{34}O_2$	281,248	281,246±0,001